LC BAND PASS FILTER

CENTER FREQUENCY (Fo): 40 MHz

3 dB BAND WITH 6 MHz MIN

INSERTION LOSS: 3 dB MAX

50 dB BANDW ITH 40 MHz MAX

INPUT POWER: 0 dB MAX

IMPEDANCE : 50 OHMS

OPERATING TEMPERATURE : ROOM OR ADVISE

WORKMANSHIP: J-STD-001

RoHS COMPLIANT: NO

FN-4383WLL

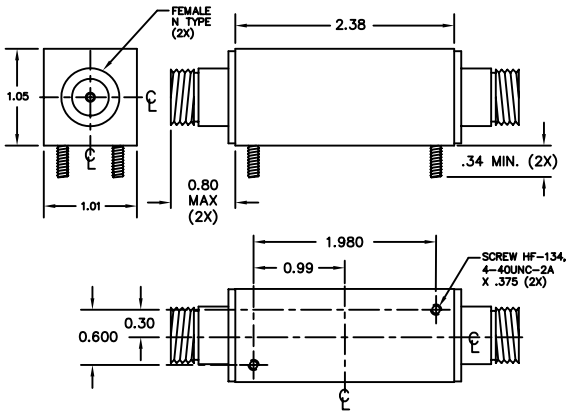

CAN: FA-440
COVER: FB-425

FN-4383WK

NOTE:
SHIP WITH 4-40 LOCKWASHERS AND HEX NUTS.

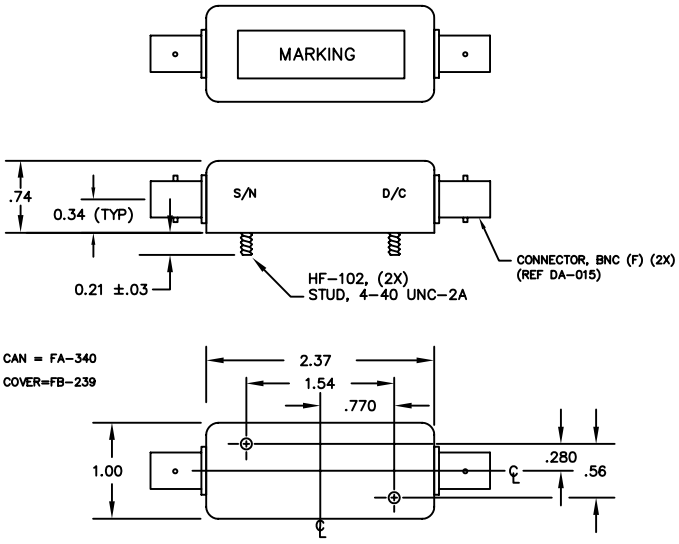

FN-4383W

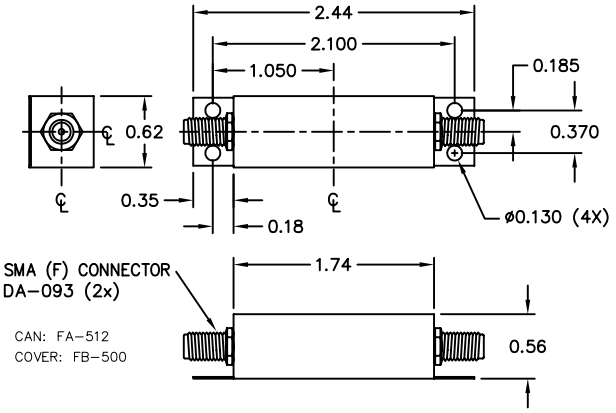

CAN: FA-512
COVER: FB-500

FN-4383W DRAWING SUMMARY

***FILTRO**NETICS, INC.*
6010 PARRETTA DR.
KANSAS CITY, MO 64120
816-231-7375
FAX 816-241-0368
WWW.FILTRO.NET

TOLERANCES UNLESS NOTED

.XX = ± .020	ANGLE = ± 1°
.XXX = ± .010	HOLES = ± .002

REVISED 01/22/2013

FILTRONETICS, INC. PROVIDES CUSTOM FILTERS, PLEASE CONTACT FACTORY.
DRAWING SUBJECT TO CHANGE WITHOUT NOTICE.